REV.	REMARK	DATE	SIGN.

RoHS

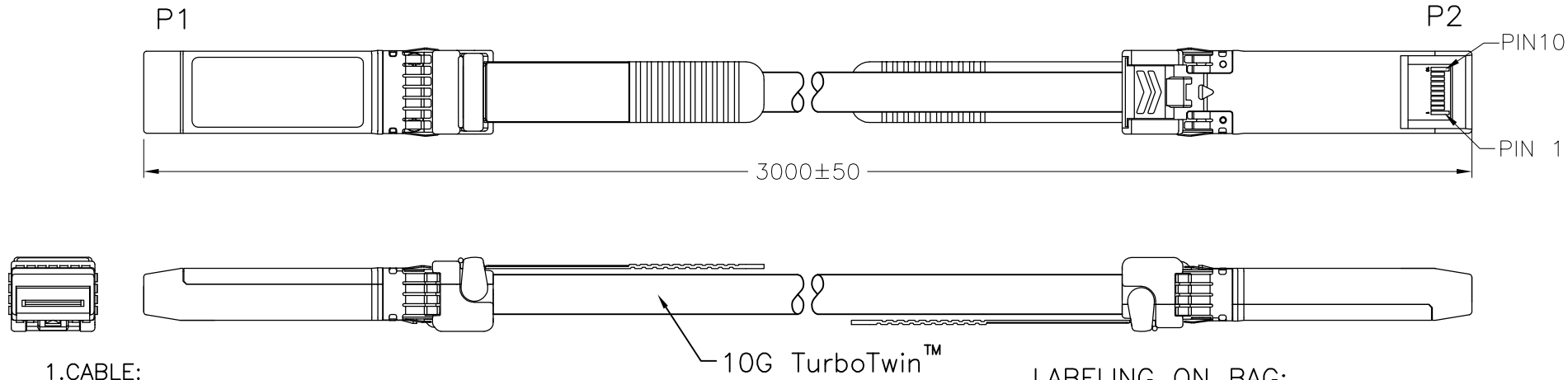

1.CABLE:
CONDUCTOR: 30 AWG SOLID SILVER PLATED COPPER.
INSULATION: FOAM POLYOLEFIN, COLOR – NATURAL.
PAIR: 2 SINGLES LAID FLAT AND PARALLEL.
CORE: 2 PAIRS
PAIR DRAIN: 30 AWG SOLID SILVER PLATED COPPER.
PAIR SHIELD: ALUMINUM/POLYESTER TAPE, ALUMINUM SIDE FACING IN.
INNER SHIELD: ALUMINUM/POLYESTER/ALUMINUM TAPE, 25% OVERLAP.
OUTER SHIELD: 38 AWG TIN PLATED COPPER BRAID, 85% COVERAGE.
JACKET: XPBT, COLOR – BLACK.
DIAMETER: 4.445 MM
DIFFERENTIAL IMPEDANCE: 100 ± 5 OHM @TDR.
PRINTED LEGEND: "TYPE CL2 75°C 30 AWG (UL) MADISON CABLE
CSA AWM II A/B 75C 30V FT4 TurboTwin™ 10G RoHS COMPLIANT {D/C}"
APPROVAL: UL TYPE CL2 AS SPECIFIED IN ARTICLE 725 OF THE NATIONAL ELECTRICAL CODE.

2.CONNECTOR:
P1&P2: SFP+ MODULE
<1> HOOD: ZINC DIE CASTING, NICKEL PLATING.
<2> LATCH: PC RESIN UL94V, COLOR IN BLACK.
<3> P.C.B.: 4 LAYERS, FR4. 30U" GOLD ON GOLDEN FINGERS.
<4> SERIAL ID IC:
<5> PULL TAB: NYLON UL94V-0 COLOR: WHITE.

LABELING ON BAG:

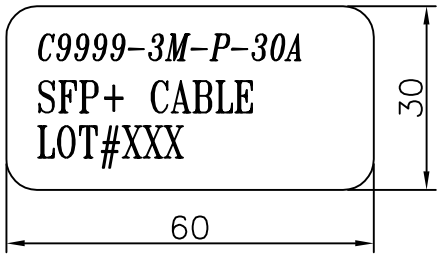

WIRING CHART			
P1 END		P2 END	
P1 PAD	SIGNAL	P2 PAD	SIGNAL
12	RX-	19	TX-
13	RX+	18	TX+
GROUND		GROUND	
18	TX+	13	RX+
19	TX-	12	RX-
GROUND		GROUND	

DataStorageCables.com	DESC.	SFP+ 3M CABLE 30AWG PASSIVE		APPROVED	CHECKED	DESIGNED	TOLERANCE	SCALE	*	UNIT	mm
	P/N		CUSTOMER P/N C9999-3M-P-30A			Sino		DATE	06/17/'10	DWG NO:	DWG\B\3237